TABLE 1: PRIMARY ANCHOR (TO RO CONDITION)

SUBSTRATE	LOCATION	HARDWARE (ACCEPTABLE TRADE NAME OR EQUIVALENT)	O.C. SPACING (MAX)	END DISTANCE (MAX)	EMBEDMENT (MIN)	SUBSTRATE EDGE DISTANCE (MIN)	d1 INSTALL DIMENSION
WOOD S.G. = 0.42	HEAD	1/4" Ø LAG SCREW, FULL BODY	12"	4"	1-1/2"	1"	2"
	SILL						
	JAMB						
CONCRETE 3,000 PSI	HEAD	1/4" Ø HILTI KWIK HUS-EZ (KH-EZ)	18"	4"	2-1/2"	1-3/4"	2"
	SILL		18"				
	JAMB		17"				
CONCRETE 4,000 PSI	HEAD	1/4" Ø HILTI KWIK HUS-EZ (KH-EZ)	20"	4"	2-1/2"	1-3/4"	2"
	SILL		20"				
	JAMB		19"				
CMU (GROUT-FILLED f'm = 1,500 PSI)	HEAD	1/4" Ø HILTI KWIK HUS-EZ (KH-EZ)	12"	4"	2-1/2"	1-1/2"	2"
	SILL		8"				
	JAMB		12"				
STEEL STUD (18 GA., 33 KSI)	HEAD	1/4"-14 SAE GR. 5 HEX/HWH (HILTI KWIK FLEX, DEWALT DRIL-FLEX)	11"	4"	3 THREADS	1"	2"
	SILL						
	JAMB						

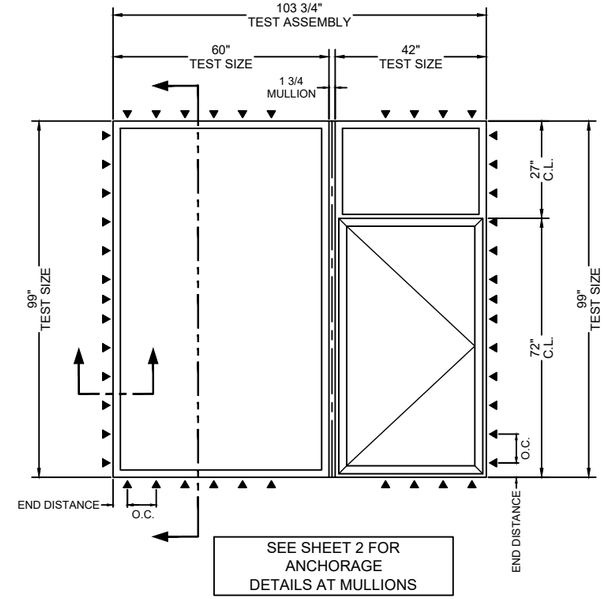

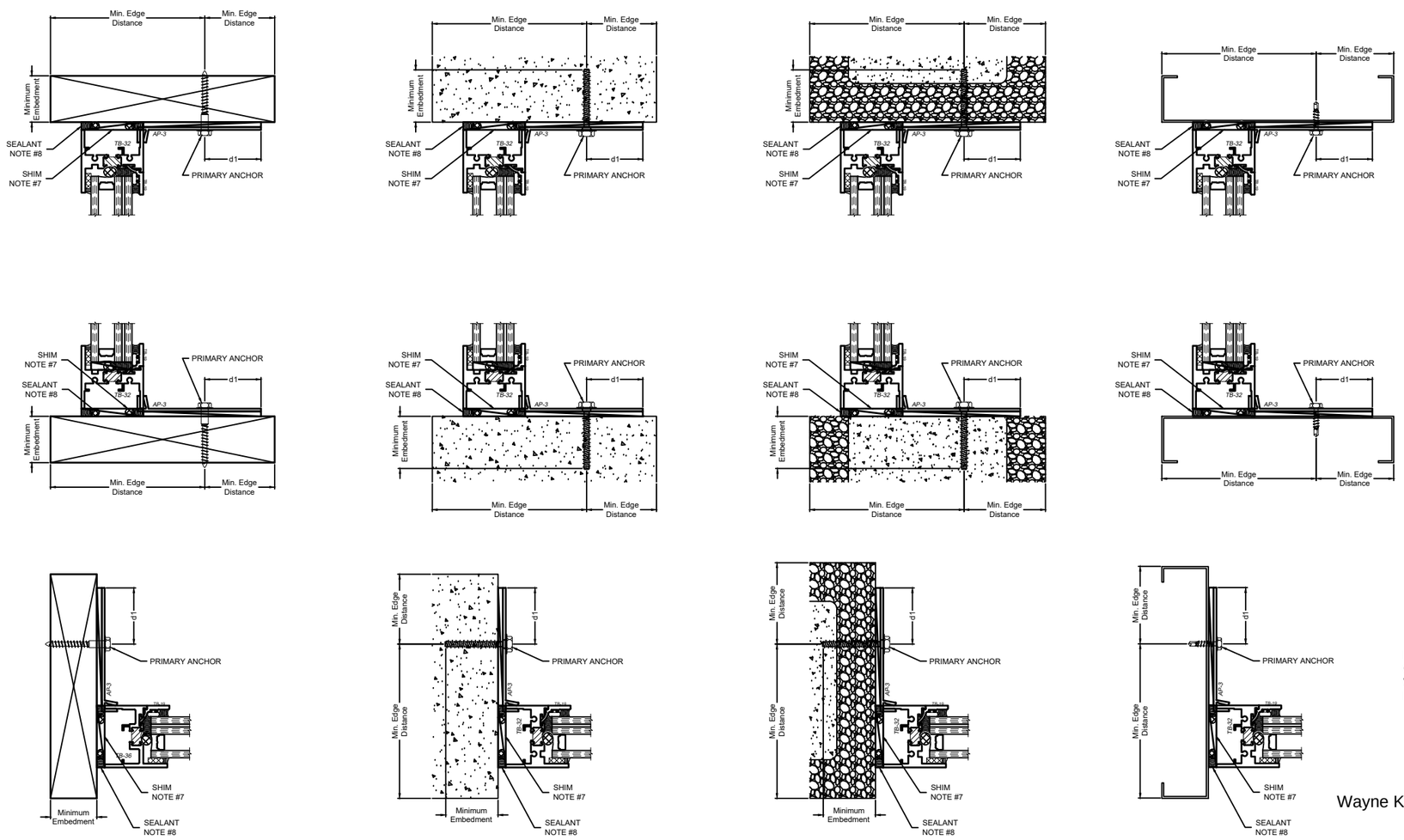

HEAD

SILL

1. Installations depicted comply with:
   Florida Building Code - 8th Ed. (FBC 2023)
   International Building Code (IBC 2021)
   National Design Specifications (ANSI/AWC NDS 2018)
   Aluminum Design Manual (ADM 2020)
   Cold-Formed Steel Design Manual (AISI-S100 2020)

2. The installation depicted in this drawing and all calculations are based on a maximum size and design wind pressure rating listed below. The products **have** been proven for resistance to Large Missile Impact per ASTM E1886 / E1996 Missile Level D.

   Test Assembly Size: **103-3/4" x 99"** Design pressure: **+/- 70 psf**

3. Lag screws shall be used for a wood substrate. Screw materials and dimensions shall meet the requirements of ANSI / ASME Standard B18.2.1. All lag screw conditions must be pre-drilled with hole diameters of 40-70% of the fastener diameter. Wood buck installations are assumed to use 2 X S-P-F (G= 0.42) or denser. Tapered or partial bucks are not allowed.

4. Approved screw anchors shall be used for concrete substrate. Anchor embedment shall be as indicated herein. Install per ESR-3027 requirements. Concrete installations are assumed to be at least f'c = 3,000 (or 4,000) psi, normal weight concrete.

5. Approved screw anchors shall be used for CMU substrate. Anchor materials and dimensions shall meet the requirements of ICC-ES AC106 - Acceptance Criteria for Predrilled Fasteners (Screw Anchors) in masonry elements. Anchor embedment shall be as indicated herein. Install per ESR-3056 requirements. Concrete masonry installations are assumed at least ASTM C90, Type II, Grade N, with f'm = 1,500 psi, and type M or S mortar.

6. Approved self-drilling screws shall be used for steel stud substrate. All fasteners installed in steel studs shall be SAE grade 5 or better. Steel stud installations assume 18 gauge, 33 ksi studs and follow AISI-S100 rules and procedures.

7. Maximum shim thickness of 1/4" permitted at each fastener location. Shims shall be non-compressible and load-bearing type.

8. Drawings depict details necessary to meet structural load requirements, but do not address air infiltration, water penetration, intrusion or thermal performance requirements of the installation. See manufacturer's Installation Instructions for sealing, flashing, drainage and other requirements.

9. Minimum fastener on center spacing to be coordinated with fastener manufacturer's technical data for the expected substrate.

10. All substrate types shall be secured to the building structure to resist all design loads, and shall have widths that exceed the window frame widths.

11. Only the 1150 Series is shown in the various sections for convenience. Anchorage requirements apply equally to 1150S Series.

JAMBS

RICE
ENGINEERING
105 School Creek Trail
Luxemburg, WI 54217
Phone: (920) 617-1042
Fax: (920) 617-1100
www.rice-inc.com

Florida Firm No: F-01000005061
Certificate of Authorization: #9090
Wayne K. Helmila
Registration No: 59092

Wayne K Helmila

Digitally signed by Wayne K Helmila
DN: CN=Wayne K Helmila, dnQualifier=A01410C000001BCDB8F4AFB001A652B, O=Wisconsin, C=US
Date: 2024.07.01 16:06:49-05'00'

WAYNE K. HELMILA
LICENSE
No. 59092
STATE OF FLORIDA
PROFESSIONAL ENGINEER

07/01/2024
COA: 9090

Rev.	Description	Date
△		
△		
△		
△		
△		

Scale: NONE
Drawn by: A. KEARNEY

Winco Window Co.
6200 Maple Ave.
St. Louis, MO 63130

PHONE: 314-725-8088

WINCO Product:
1150-1150S FIXED & CASEMENT

Installation:
ANCHORAGE: F CLIPS SHT. 1 OF 2

Certification:
LMI - 1150-1150S - D MISSILE

TABLE 2: ANCHOR CLUSTER CENTERED ON MULLION SUPERCEDES NORMAL O.C. SPACING WHERE CLUSTER OCCURS				
SUBSTRATE	LOCATION	HARDWARE (ACCEPTABLE TRADENAME OR EQUIVALENT)	NUMBER OF ANCHORS IN CLUSTER	O.C. SPACING (MAX)
WOOD SG = 0.42	HEAD	1/4" Ø LAG SCREW, FULL BODY	6	4"
	SILL			
CONCRETE 3,000 PSI	HEAD	1/4" Ø HILTI KWIK HUS-EZ (KH-EZ)	4	5"
	SILL			
CONCRETE 4,000 PSI	HEAD	1/4" Ø HILTI KWIK HUS-EZ (KH-EZ)	3	6"
	SILL			
CMU (GROUT FILLED) f'm = 1,500 PSI	HEAD	1/4" Ø HILTI KWIK HUS-EZ (KH-EZ)	5	4"
	SILL		8	
STEEL STUD (18 ga. 33ksi)	HEAD	1/4"-14 SAE GR. 5 HEX/HWH HILTI KWIK FLEX OR DEWALT DRIL-FLEX	6	4"
	SILL			

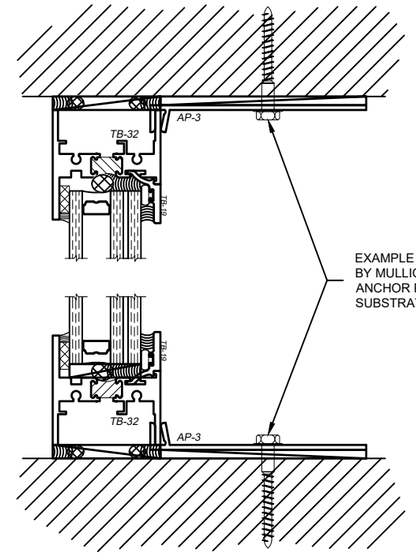

EXAMPLE OF ANCHOR LOCATION REFERENCED BY MULLION ANCHOR CLUSTER. ANCHOR POSITION, EMBEDMENT, AND SUBSTRATE EDGE DISTANCE TO MATCH TABLE 1

RICE
ENGINEERING
105 School Creek Trail
Luxemburg, WI 54217
Phone: (920) 617-1042
Fax: (920) 617-1100
www.rice-inc.com
Florida Firm No: F-01000005061
Certificate of Authorization: #9090
Wayne K. Helmila
Registration No: 59092

See Sheet 1 for general notes.

WINCO WINDOW

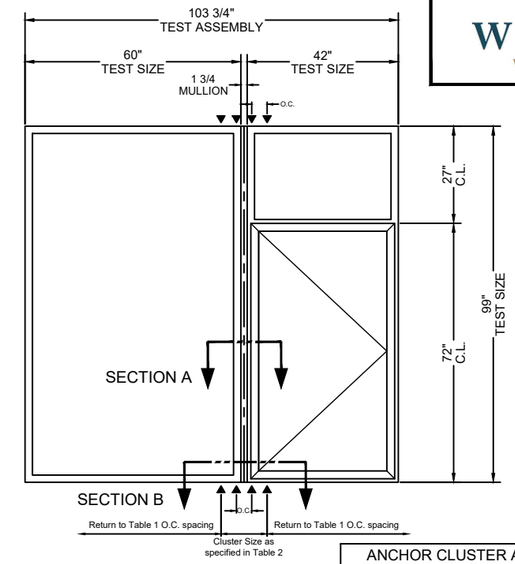

ANCHOR CLUSTER AT MULLIONS (SEE SHEET 1 FOR ANCHORAGE DETAILS AT ALL OTHER LOCATIONS)

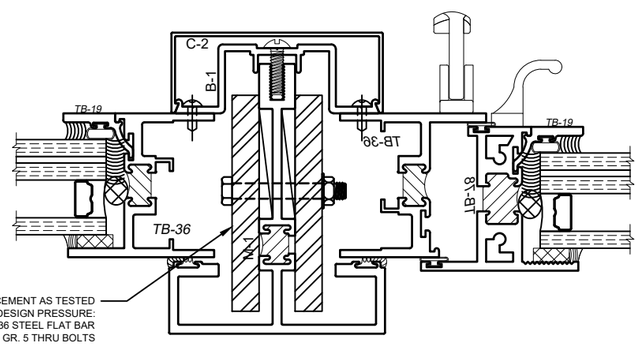

STEEL REINFORCEMENT AS TESTED FOR MAX WINDOW SIZES AND DESIGN PRESSURE: (2) 3/8" X 3" PRIMER COATED A36 STEEL FLAT BAR ATTACHED WITH Ø1/4" SAE GR. 5 THRU BOLTS AT 16" O.C. AND 3" FROM ENDS

SECTION A: STEEL REINFORCEMENT

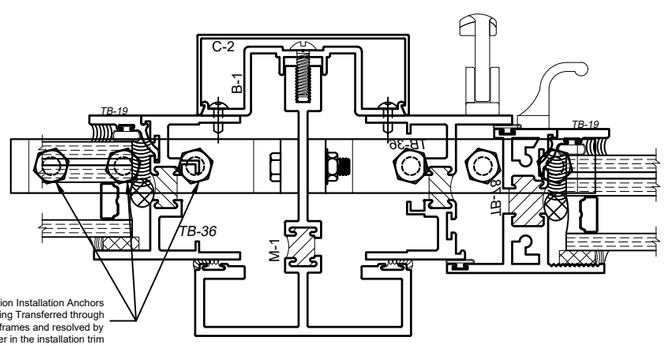

Non-Structural Mullion Installation Anchors Mullion Loading Transferred through adjacent window frames and resolved by the anchor cluster in the installation trim

SECTION B: ANCH4 (HEAD SIMILAR)

ATTACHMENTS AT MULLION

MULLION CLAMP ANCHORAGE TO MULLION & FRAME

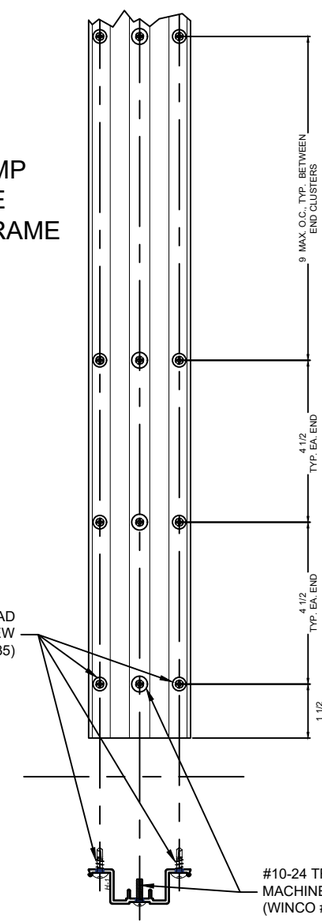

GLAZING MAKE-UP AND SERIES VARIATION

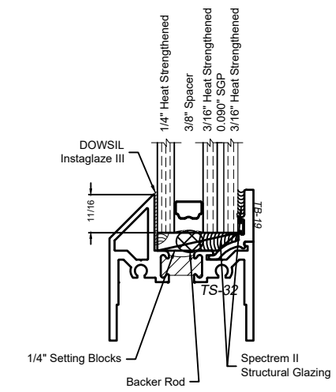

1150S

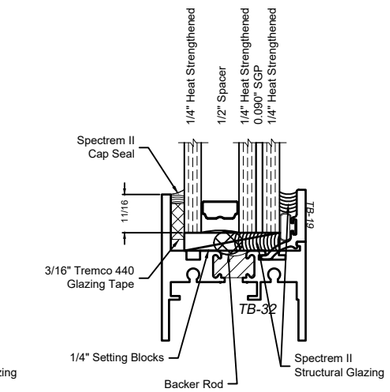

1150

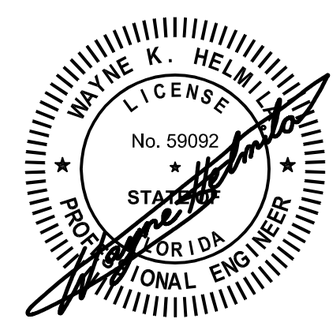

07/01/2024
COA: 9090

Rev.	Description	Date
△		
△		
△		
△		
△		

Scale:	Drawn by:
NONE	A. KEARNEY

Winco Window Co.
6200 Maple Ave.
St. Louis, MO 63130

PHONE: 314-725-8088

WINCO Product:
1150-1150S FIXED & CASEMENT

Installation:
ANCHORAGE: F CLIPS SHT. 2 OF 2

Certification:
LMI - 1150-1150S - D MISSILE